IU-0345-AN

CONTENTS

1. OUT CASE ASSY
2. DOOR FRAME ASSY
3. GRILL & AIR FILTER
4. OUT CASE ASSY 2
5. OUT CASE ASSY 3
6. BASE ASSY 1
7. WATER IN/OUT
   WATER RESERVOIR ASSY
8. BASE ASSY 2
9. ICE MAKING PARTS
   - EVAPORATOR ASSY
10. BASE ASSY 3

Ver1.0 2025.12.26

IU-0345-AN

[OUT CASE ASSY 1]

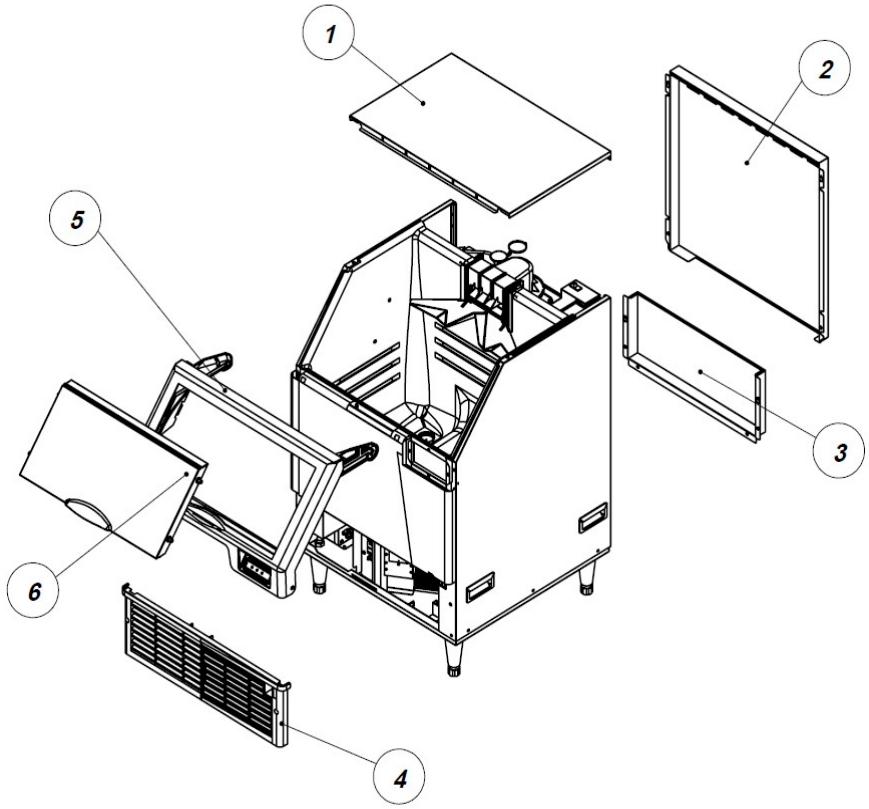

NO	ITEMS	CODE	Option	SVC	Q'TY
1	ASSY COVER TOP	442010300		YES	1
2	PANEL BACK OUT *T	349112800		NO	1
3	PANEL BACK OUT *U	349112700		NO	1
4	GRILLE	391015000		YES	1
5	DOOR FRAME ASSY	447011740		YES	1
6	DOOR ASSY	447012300		YES	1

IU-0345-AN

[DOOR FRAME ASSY]

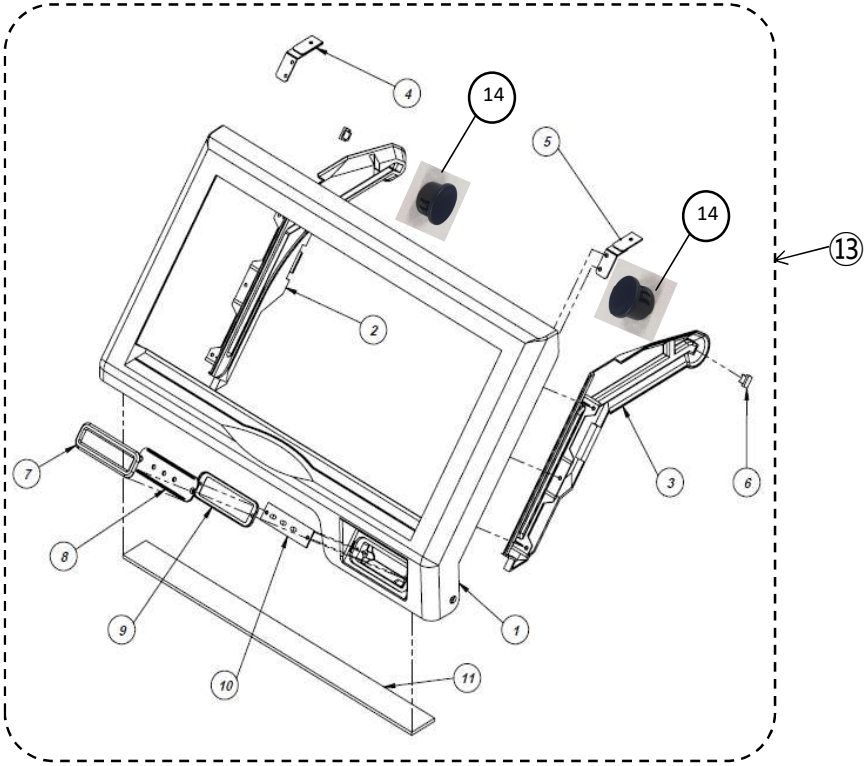

NO	ITEMS	CODE	Option	SVC	Q'TY
1	DOOR FRAME	391014701		NO	1
2	DOOR RAIL FARAME L	391014801		YES	1
3	DOOR RAIL FARAME R	391014901		YES	1
4	BRACKET FRAME DOOR WELD *L	301261400		NO	1
5	BRACKET FRAME DOOR WELD *R	301261500		NO	1
6	DOOR STOPPER	303031500		YES	2
7	FRAME DISPLAY	341013700		NO	1
8	COVER DISPLAY	341013600		NO	1
9	DISPLAY PCB SEAL	229027901		NO	1
10	DISPLAY PCB ASSY	415001200		YES	1
11	FOAM PE	306037600		NO	1
12	FRONT DISPLAY(NEW LOGO)	440030030		YES	1
13	DOOR FRAME ASSY	447011740		YES	1
14	HOLE PLUG(Φ16)	391017510		YES	2

IU-0345-AN

[GRILL & AIR FILTER]

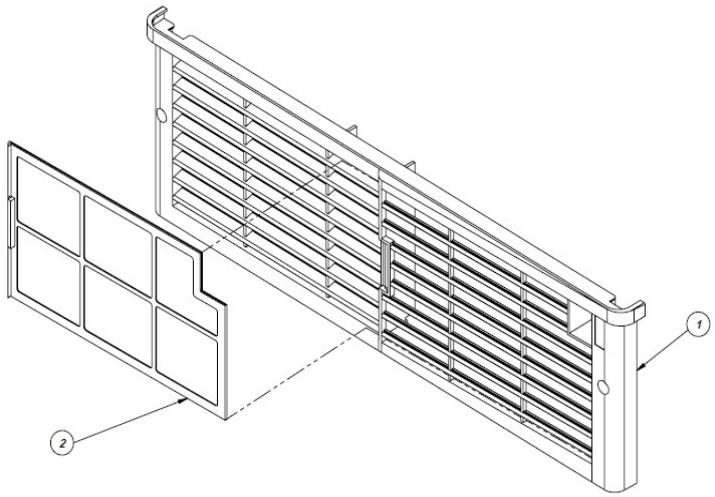

NO	ITEMS	CODE	Option	SVC	Q'TY
1	GRILLE	391015000		YES	1
2	AIR FILTER	640007600		YES	1

IU-0345-AN

[OUT CASE ASSY 2]

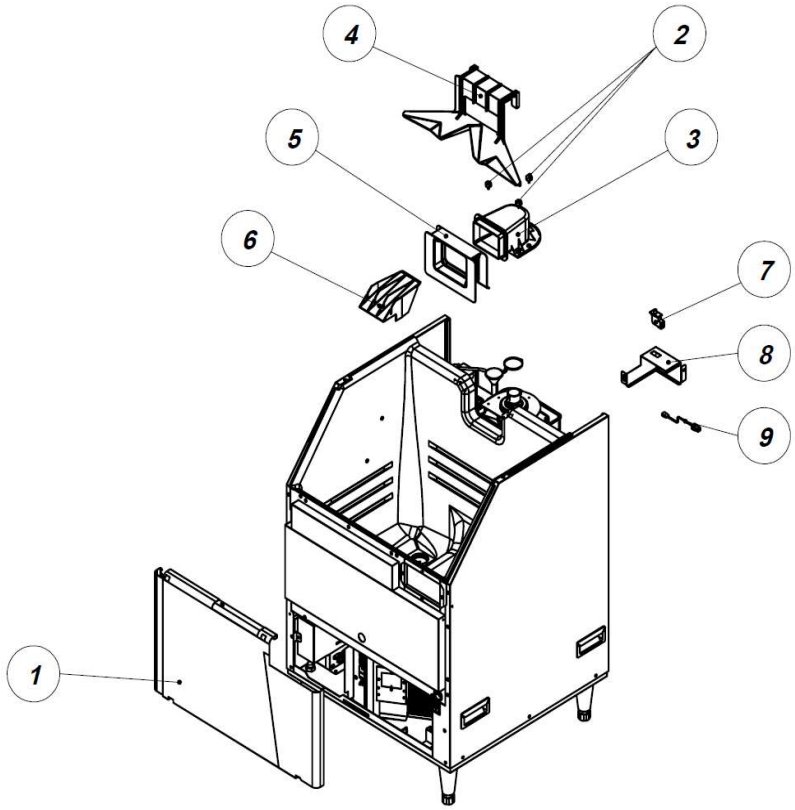

NO	ITEMS	CODE	Option	SVC	Q'TY
1	ASSY PANEL FRONT	432053800		NO	1
2	HAND SCREW(BLACK)	210804502		YES	3
3	SPOUT	450000600		YES	1
4	GUIDE ICE A	341017600		YES	1
5	FLANGE SPOUT	397003000		YES	1
6	GUIDE ICE B	341017700		YES	1
7	DOOR SWITCH	355025200		YES	1
8	BRACKET SAFETY SWITCH	301257600		NO	1
9	HARNESS PUSH S/W	377206900		YES	1

IU-0345-AN

[OUT CASE ASSY 3]

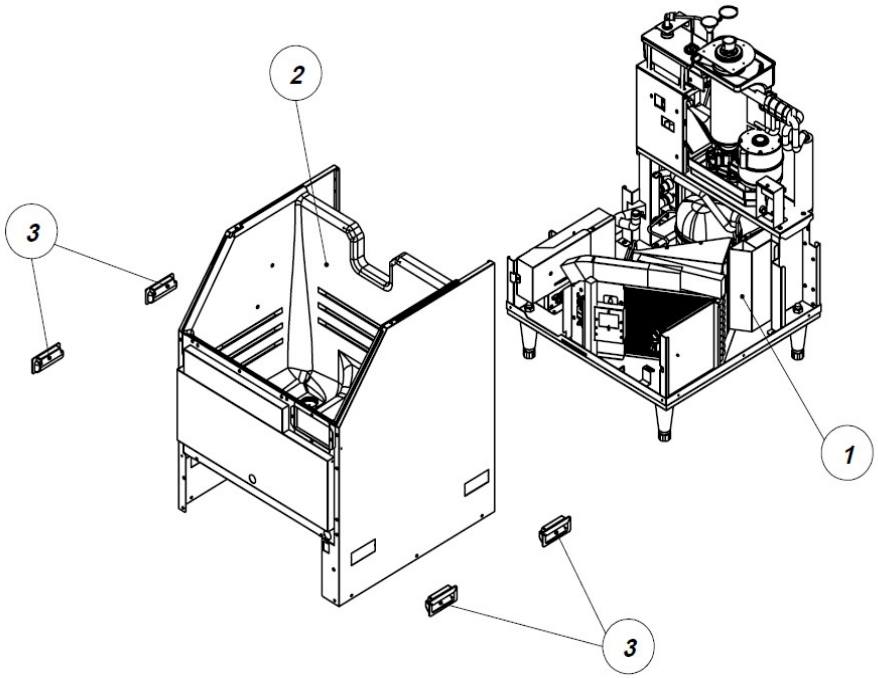

NO	ITEMS	CODE	Option	SVC	Q'TY
1	ASSY BASE	483033000		NO	1
2	ASSY CASE URT	467022100		NO	1
3	EMBEDDED PULL	319010800		NO	4

IU-0345-AN

[BASE ASSY 1]

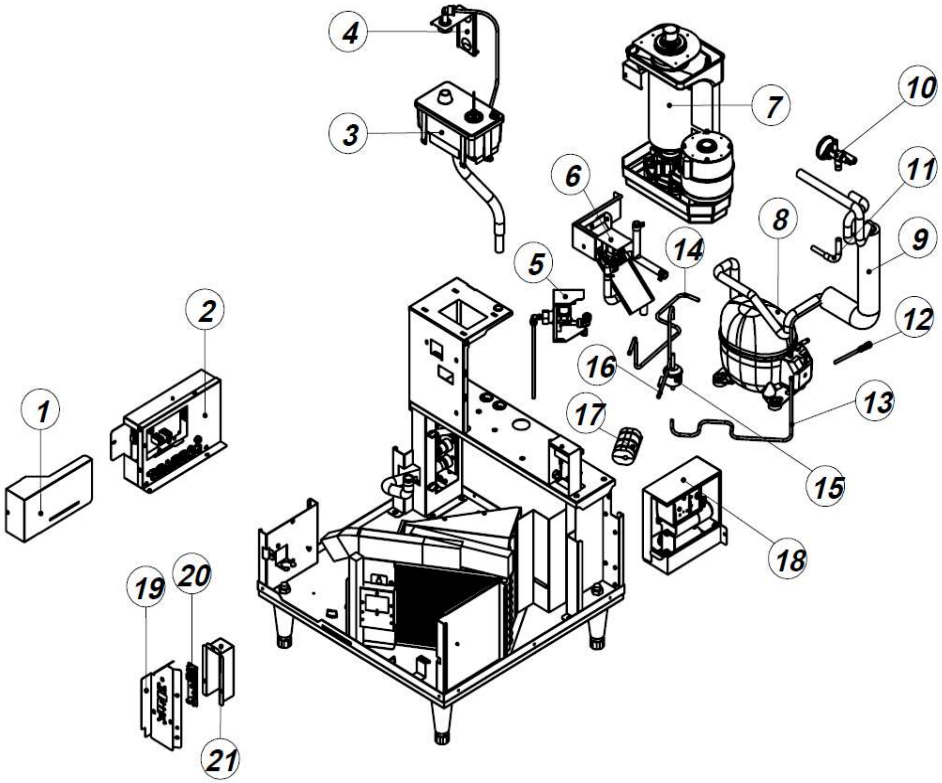

NO	ITEMS	CODE	Option	SVC	Q'TY
1	COVER CONTROL BOX	374154000		NO	1
2	ASSY CONTROL BOX	426077400		YES	1
3	WATER RESERVOIR ASS'Y	470003110		YES	1
4	ASSY RESERVOIR INLET BRACKET	463000900		YES	1
5	ASSY WATER VALVE BKT	408001900		YES	1
6	ASSY DRAIN VALVE	417023000		YES	1
7	ICE MAKING PARTS	SEE "ICE MAKING PARTS"			1
8	COMP	394025500		YES	1
9	SUCTION PIPE AS	325168700		NO	1
10	EXPANSION VALVE	340034200		NO	1
11	EXPANSION OUTLET PIPE	325159200		NO	1
12	동관(직선)-Φ6.35xL180	104002600		NO	1
13	PIPE DRYER OUTLET	325168900		NO	1
14	DISCHARGE PIPE	325168500		NO	1
15	FILTER DRYER	372001610		YES	1
16	PIPE DRYER INLET	325168800		NO	1
17	FOAM SENSOR INSULATION	306043300		YES	1
18	ASSY CSR BOX	426077200		YES	1
19	BOX FND PCB B	374153800		NO	1
20	ASSY FND USB PCB	367017200		YES	1
21	BOX FND PCB B	374155200		NO	1

IU-0345-AN

[WATER IN/OUT, WATER RESERVOIR ASSY]

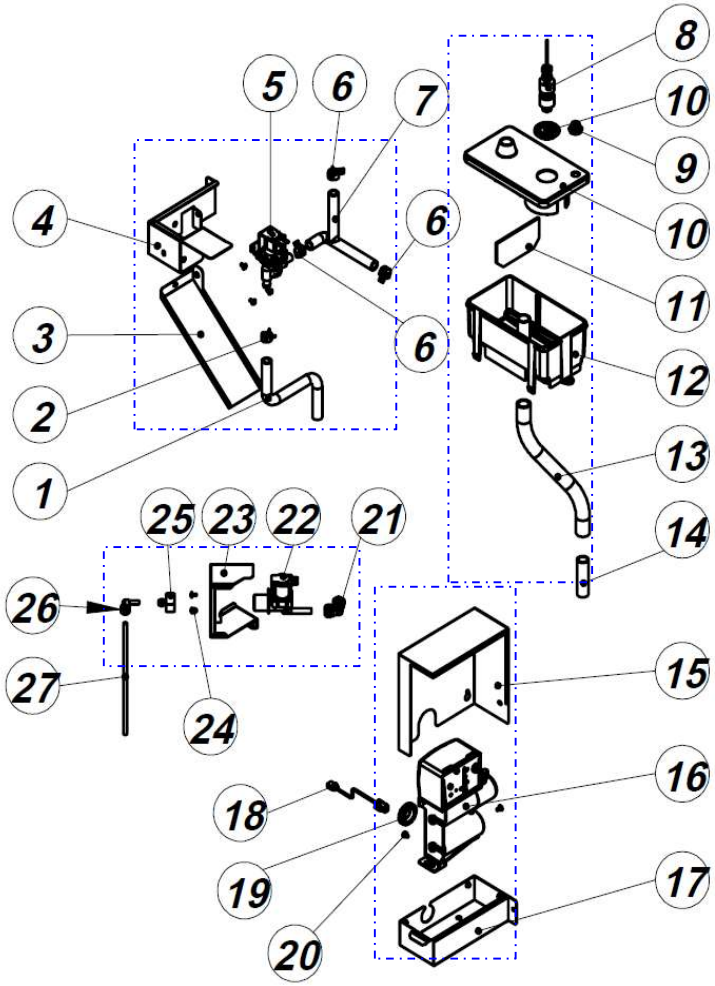

NO	ITEMS	CODE	Option	SVC	Q'TY
1	HOSE DRAIN C	229038801		YES	1
2	BAND SPRING 17	203003200		NO	1
3	BRACKET WATER DRIP GUIDE	301256800		NO	1
4	BRACKET DRAIN VALVE	301247300		NO	1
5	WATER VALVE (DELTROL DC24V)	340035100		YES	1
6	BAND SPRING 16	203004100		NO	3
7	MULTIPLE WATER HOSE	229038901		YES	1
8	ASSY WATER LEVEL SENSOR	722014501		YES	1
9	FUNNEL PACKING	303037200		YES	1
10	WATER RESERVOIR COVER	654000301		YES	1
11	WATER RESERVOIR SCREEN	392000500		YES	1
12	WATER RESERVOIR	654000200		YES	1
~~13~~	~~SILICON HOSE (OVERFLOW)~~	~~229029500~~		~~YES~~	~~1~~
~~14~~	~~PIPE~~	~~325011400~~		~~YES~~	~~1~~
15	COVER CSR BOX(NEU6214U)	374154200		NO	1
16	CSR BOX ASS'Y(NEU6214U)	426076600		YES	1
17	BASE CSR BOX(NEU6214U)	374154100		NO	1
18	HARNESS COMP	377207600		YES	1
19	BUSHING	232000500		NO	1
20	SCREW MACHINE	AACB04010		NO	4
21	REDUCING ELBOW	398013700		NO	1
22	WATER VALVE	340029401		YES	1
23	BRACKET WATER VALVE	301247400		NO	1
24	SCREW MACHINE	AACB04010		NO	2
25	TAP ADAPTOR	398011600		YES	1
26	STEM ELBOW	398015300		YES	1
27	PE TUBE(O.D 1/4")	229013600		NO	0.22

IU-0345-AN

[BASE ASSY 2]

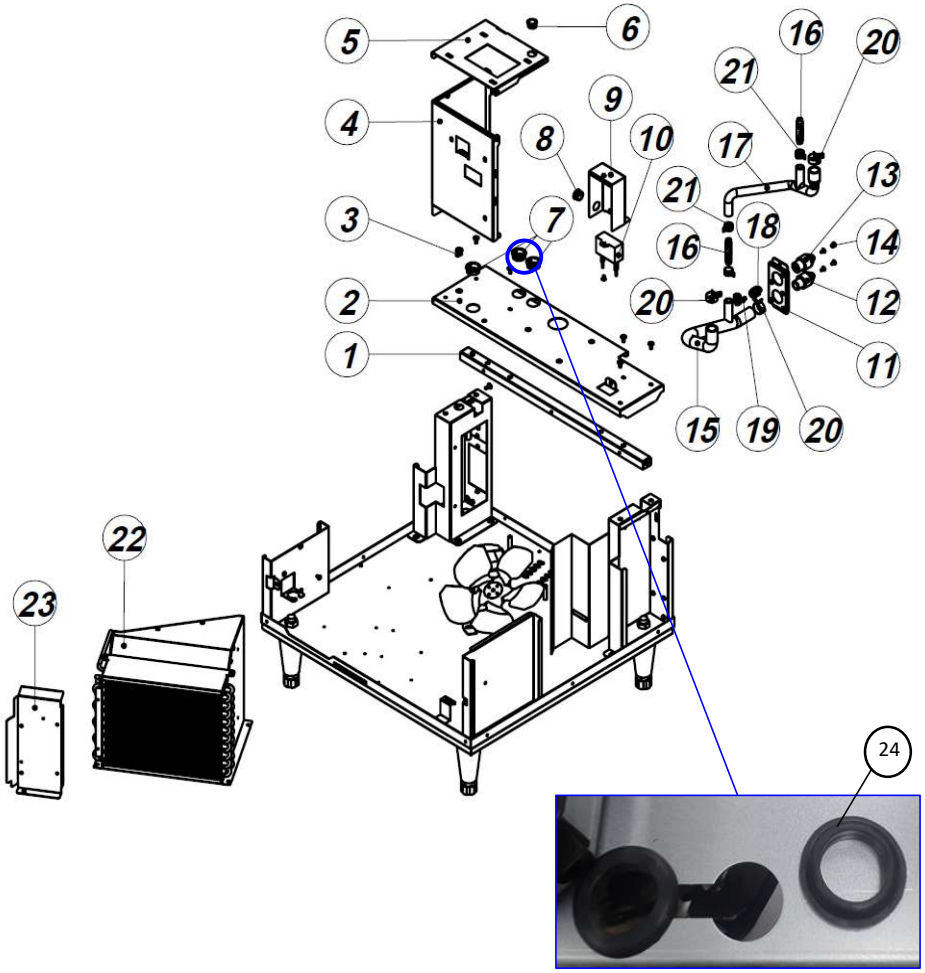

NO	ITEMS	CODE	Option	SVC	Q'TY
1	REINFORCE AUGER MOTOR BKT	301256100		NO	1
2	SUPPORT AUGER MOTOR BKT	301246800		NO	1
3	GROMMET BUSHING	232003800		NO	1
4	FRAME WATER TANK BKT	301246900		NO	1
5	BASE WATER TANK BKT	301247000		NO	1
6	GROMMET BUSHING	232003600		NO	1
7	GROMMET BUSHING	232003500		NO	1
8	GROMMET BUSHING	232003600		NO	1
9	BRACEKT CAPACITOR BOX(GGM)	301256500		NO	1
10	CAPACITOR	659021500		YES	1
11	BRACKET WATER CONNECTION SOCKET	301247100		NO	1
12	SOCKET	215013400		NO	1
13	SOCKET	215013500		NO	1
14	SCREW MACHINE	AACB04010		NO	4
15	HOSE DRAIN A	229038601		YES	1
16	NIPPLE	398011401		YES	2
17	HOSE DRAIN B	229038701		YES	1
18	STRAIGHT ADAPTOR	398013400		YES	1
19	STEM ELBOW	398015300		YES	1
20	BAND SPRING 23	203002200		NO	3
21	BAND SPRING 16	203004100		NO	3
22	ASSY CONDENSER	411037100		YES	1
23	BRACKET AIR GUIDE *F	301247800		NO	1
24	BUSHING	232000500		NO	2

IU-0345-AN

[ICE MAKING PART]

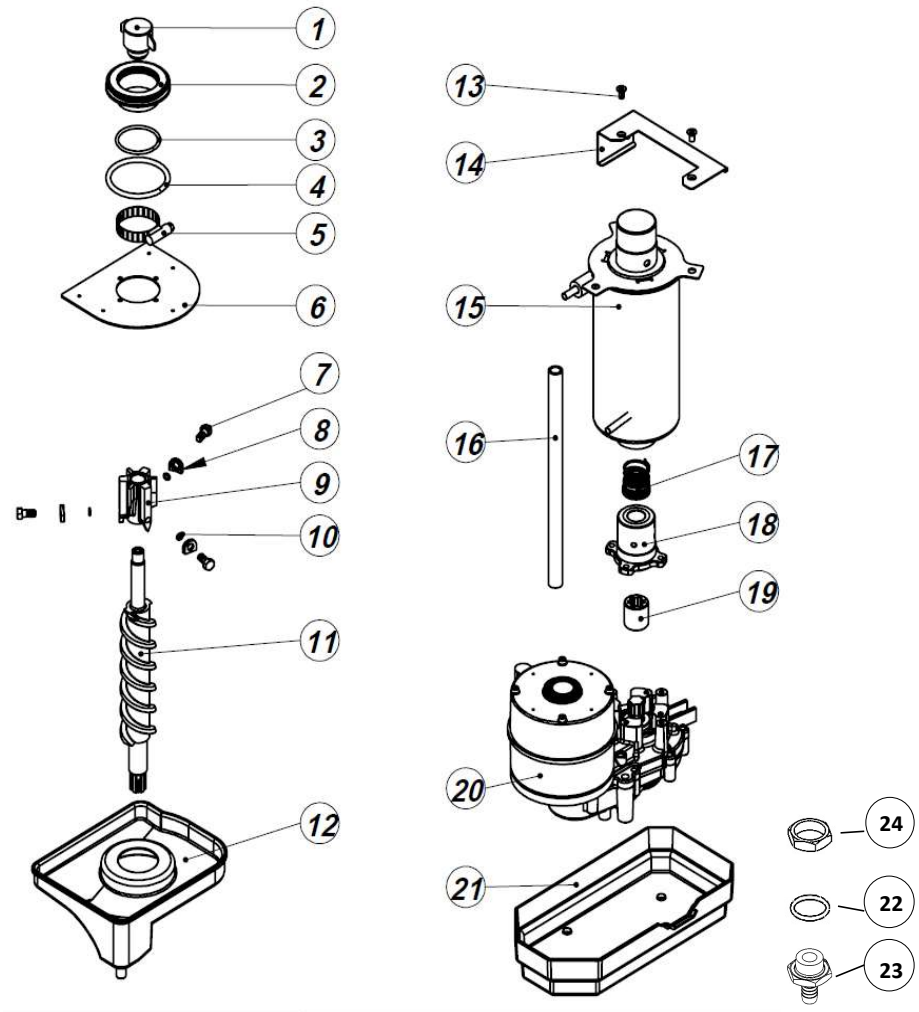

NO	ITEMS	CODE	Option	SVC	Q'TY
0	ICE MAKING PARTS	409048000		YES	1
1	IMPELLER ICE ASSY	390001500		YES	1
2	HOLD SPOUT	395007800		YES	1
3	PACKING	303041800		YES	1
4	O-RING	303037500		YES	1
5	BAND SPRING 16	203004100		YES	1
6	FLANGE SPOUT	301199500		YES	1
7	HEX WRENCH BOLT SEMS(스프링+평와셔)	210820700		YES	3
8	HEAD LOCKING WASHER	443062601		YES	3
9	EXTRUDING HEAD ASSY	491000801		YES	1
10	O-RING NBR	303032000		YES	3
11	AUGER	430005000		YES	1
12	DRIP PAN	604003400		YES	1
13	SCREW MACHINE	AAED02120		YES	2
14	BRACKET EVA FIXTURE	301257500		NO	1
15	EVAPORATOR FORM TOTAL ASSY	409044310		NO	1
16	SILICON HOSE (EVAP INLET)	229029400		NO	1
17	MECHANICAL SEAL	303036900		YES	1
18	HOUSING ASSY	491000900		NO	1
19	SPLINE COUPLING	612000800		NO	1
20	AUGER MOTOR ASSY	406026400		YES	1
21	GEAR MOTOR DRAIN PAN (후가공)	610035760		YES	1
22	O-RING (AN-120)	303044600		YES	1
23	HOSE NIPPLE (PACKING)	215021000		YES	1
24	VESSEL NUT	215020000		YES	1

IU-0345-AN

[BASE ASSY 3]

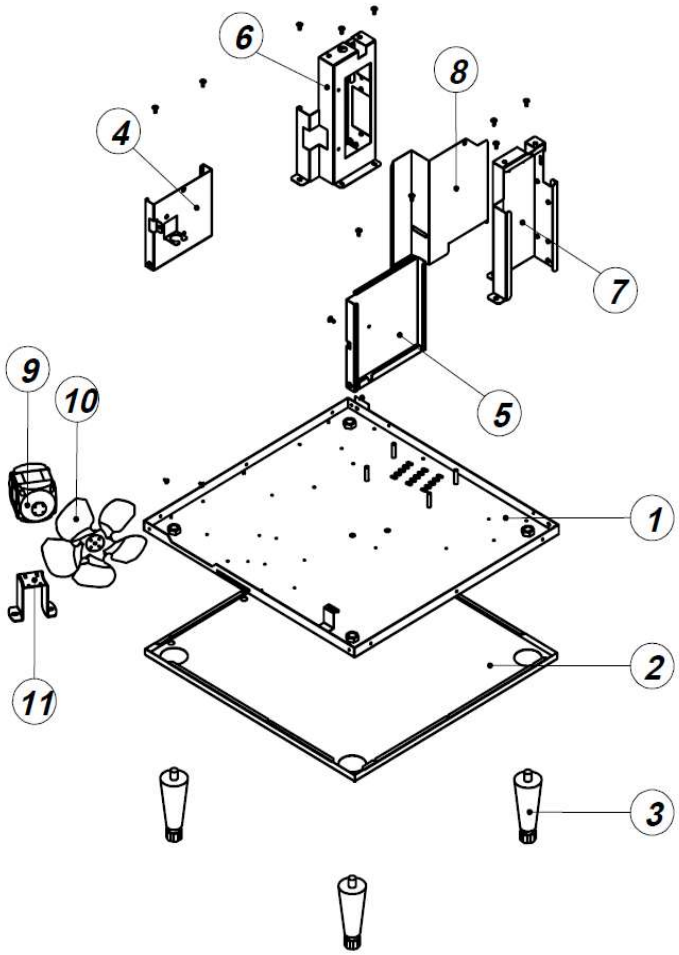

NO	ITEMS	CODE	Option	SVC	Q'TY
1	BASE PLATE WELD	318044010		NO	1
2	BASE PLATE COVER	318044200		NO	1
3	FOOT EXPORT	302006820		YES	4
4	SUPPORT BASE FRAME *F *L	320011800		NO	1
5	SUPPORT BASE FRAME *F *R	320011900		NO	1
6	SUPPORT BASE FRAME *B *L	350010400		NO	1
7	SUPPORT BASE FRAME *B *R	350010500		NO	1
8	BRACKET AIR GUIDE *B	301247900		NO	1
9	FAN MOTOR/EURO/82UL-4027	353035800		YES	1
10	FAN	308004700		YES	1
11	BRACKET EURO MOTOR(20~34W)	301131120		YES	1